# Rowerek

**0071015**

**METAL - FITNESS STANDARD**

## Material specification:

| | |
|---|---|
| **Construction Material** | galvanized steel coated with powder paint for durability and corrosion resistance or made of stainless steel |
| **Foundation** | buried in the ground to a specified depth and concreted with at least B-20 class concrete or bolted to a concrete base |
| **Boards** | HDPE sheets with milled drawings |
| **Other** | Śruby wykonane ze stali nierdzewnej. Podstopnice stalowe, ocynkowane, malowane proszkowo. Stopnice wykonane z blachy aluminiowej ryflowanej. Łożyska toczone kulkowe zwykłe. |

Due to continuous improvement of technical solutions by Freekids, the presented drawings, including colours and dimensions, may differ slightly from currently manufactured devices.

FreeKids s.c. A. Gąsiorek, Z.Andruszewski
Trzęsowice 32, 55-106 Zawonia
tel./fax: +48 71 312 72 50, +48 724 654 898
e-mail: biuro@freekids.pl www.freekids.pl

# Rowerek

**0071015**

**METAL - FITNESS STANDARD**

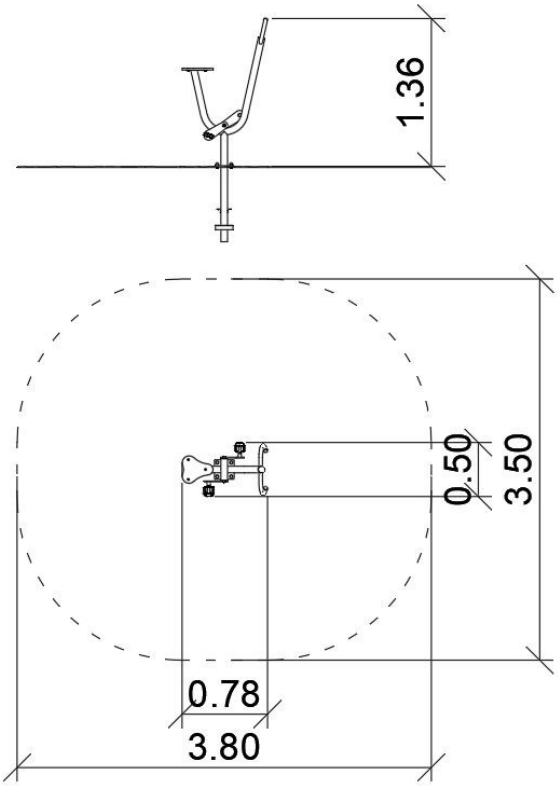


## DEVICE DATA:

| | |
|---|---|
| Device dimension | 0,78 x 0,50 x 1,36 m |
| Zone dimension | 3,80 x 3,50 |
| Fall height | 0,90 m |
| Safety zone area | 11,37 m2 |
| User age | 14+ |
| Number of users | 140 kg |
| Material | Metal |
| Low fall height | tak |
| Compliance with standards | PN-EN 16630 |

Rowerek
Funkcje urządzenia:
Klasyczny rowerek. Wzmacnia mięśnie nóg oraz poprawia krążenie. Spełnia funkcje rozgrzewki.
Sposób ćwiczenia:
Usiądź na siedzisku, złap rękoma za uchwyty, umieść stopy na pedałach. Pedałuj jak na rowerze.

Due to continuous improvement of technical solutions by Freekids, the presented drawings, including colours and dimensions, may differ slightly from currently manufactured devices.

FreeKids s.c. A. Gąsiorek, Z.Andruszewski
Trzęsowice 32, 55-106 Zawonia
tel./fax: +48 71 312 72 50, +48 724 654 898
e-mail: biuro@freekids.pl www.freekids.pl