Inclusive

Tablica IQ zegar

0099004

METAL - UZUPEŁNIAJĄCE



Material specification:

Construction Material	galvanized steel coated with powder paint for durability and corrosion resistance or made of stainless steel
Foundation	buried in the ground to a specified depth and concreted with at least B-20 class concrete or bolted to a concrete base
Boards	HDPE sheets with milled drawings or Durable HPL sheet
Other	Śruby wykonane ze stali nierdzewnej z poliamidowymi nakładkami. Słupy konstrukcyjne zakończone półsferycznymi zaślepkami gumowymi.

Due to continuous improvement of technical solutions by Freekids, the presented drawings, including colours and dimensions, may differ slightly from currently manufactured devices.

FreeKids s.c. A. Gąsiorek, Z.Andruszewski
Trzęsowice 32, 55-106 Zawonia
tel./fax: +48 71 312 72 50, +48 724 654 898
e-mail: biuro@freekids.pl www.freekids.pl

rev. 001/2026

Tablica IQ zegar

0099004

METAL - UZUPEŁNIAJĄCE

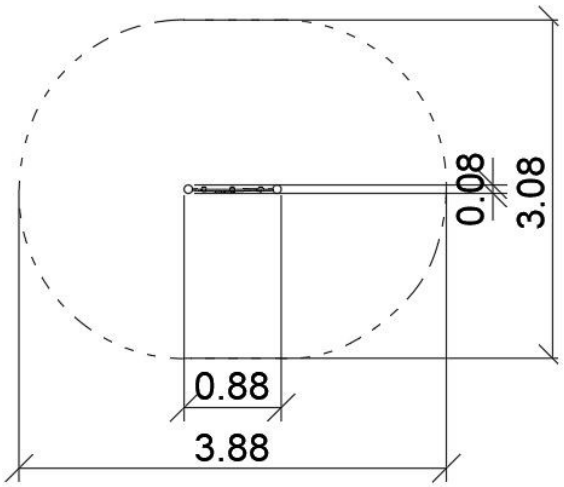

DEVICE DATA:

Device dimension	0,88 x 0,08 x 1,30 m
Zone dimension	3,88 x 3,08 m
Fall height	nie dotyczy m
Safety zone area	10,00 m2
User age	1-7
Number of users	1
Material	Metal
Low fall height	nie dotyczy
Compliance with standards	PN-EN 1176

Due to continuous improvement of technical solutions by Freekids, the presented drawings, including colours and dimensions, may differ slightly from currently manufactured devices.

FreeKids s.c. A. Gąsiorek, Z.Andruszewski
Trzęsowice 32, 55-106 Zawonia
tel./fax: +48 71 312 72 50, +48 724 654 898
e-mail: biuro@freekids.pl www.freekids.pl

rev. 001/2026