Huśtawka łączona drewniana pojedyncza A + Bocianie gniazdo

Inclusive

0020052

DREWNO - UZUPEŁNIAJĄCE



Material specification:

Construction Material	made of glued wood, surface-impregnated, square cross-section 95 x 95 mm
Additional Elements Handrails	galvanized black steel, powder-coated or stainless steel
Foundation	buried in the ground to a specified depth and concreted with at least B-20 class concrete or bolted to a concrete base
Other	Śruby wykonane ze stali nierdzewnej z poliamidowymi nakładkami. Łańcuchy ze stali nierdzewnej. Bezpieczne i ergonomiczne siedziska.

Due to continuous improvement of technical solutions by Freekids, the presented drawings, including colours and dimensions, may differ slightly from currently manufactured devices.

FreeKids s.c. A. Gąsiorek, Z.Andruszewski
Trzęsowice 32, 55-106 Zawonia
tel./fax: +48 71 312 72 50, +48 724 654 898
e-mail: biuro@freekids.pl www.freekids.pl

rev. 001/2026

Huśtawka łączona drewniana pojedyncza A + Bocianie gniazdo

0020052

DREWNO - UZUPEŁNIAJĄCE

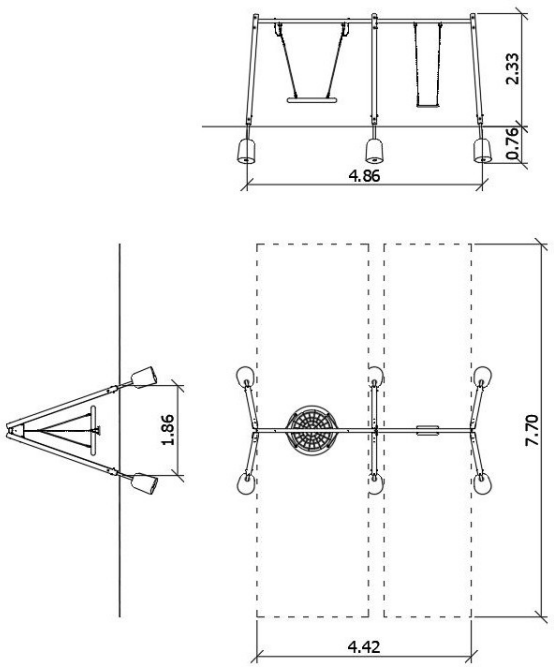

DEVICE DATA:

Device dimension	4,86 x 1,86 x 2,33 m
Zone dimension	7,70 x 4,42 m
Fall height	1,40 m
Safety zone area	31,50 m2
User age	3-12
Number of users	3
Material	Drewno
Low fall height	nie
Compliance with standards	PN-EN 1176

Due to continuous improvement of technical solutions by Freekids, the presented drawings, including colours and dimensions, may differ slightly from currently manufactured devices.

FreeKids s.c. A. Gąsiorek, Z.Andruszewski
Trzęsowice 32, 55-106 Zawonia
tel./fax: +48 71 312 72 50, +48 724 654 898
e-mail: biuro@freekids.pl www.freekids.pl

rev. 001/2026