Walec

0210009

METAL - MINI CITY

Material specification:

Construction Material	galvanized steel coated with powder paint for durability and corrosion resistance or made of stainless steel
Platforms	HPL panels
Foundation	buried in the ground to a specified depth and concreted with at least B-20 class concrete or bolted to a concrete base
Sheets	HDPE sheets with milled drawings
Slides	made of stainless steel, tubular, tube-shaped, or with HDPE plate sides

Due to continuous improvement of technical solutions by Freekids, the presented drawings, including colours and dimensions, may differ slightly from currently manufactured devices.

FreeKids s.c. A. Gąsiorek, Z.Andruszewski
Trzęsowice 32, 55-106 Zawonia
tel./fax: +48 71 312 72 50, +48 724 654 898
e-mail: biuro@freekids.pl www.freekids.pl

Walec

0210009

METAL - MINI CITY

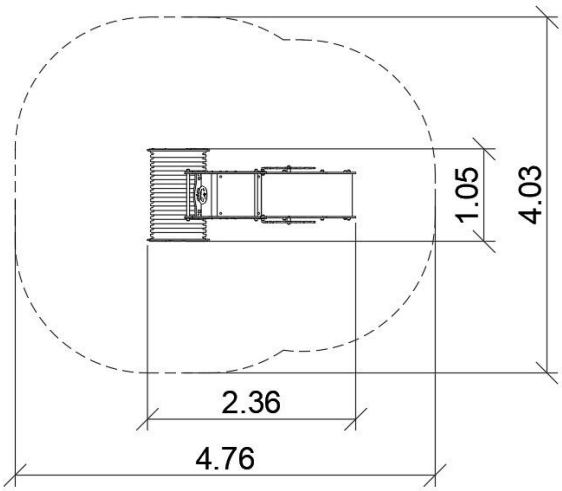

DEVICE DATA:

Device dimension	1,05 x 2,36 x 1 ,44 m
Zone dimension	4,03 x 4,76 m
Fall height	0,60 m
Safety zone area	16,2 m2
User age	2-6
Number of users	6
Material	Metal
Low fall height	tak
Compliance with standards	PN-EN 1176

Due to continuous improvement of technical solutions by Freekids, the presented drawings, including colours and dimensions, may differ slightly from currently manufactured devices.

FreeKids s.c. A. Gąsiorek, Z.Andruszewski
Trzęsowice 32, 55-106 Zawonia
tel./fax: +48 71 312 72 50, +48 724 654 898
e-mail: biuro@freekids.pl www.freekids.pl