Elipso 8

0094038

METAL -

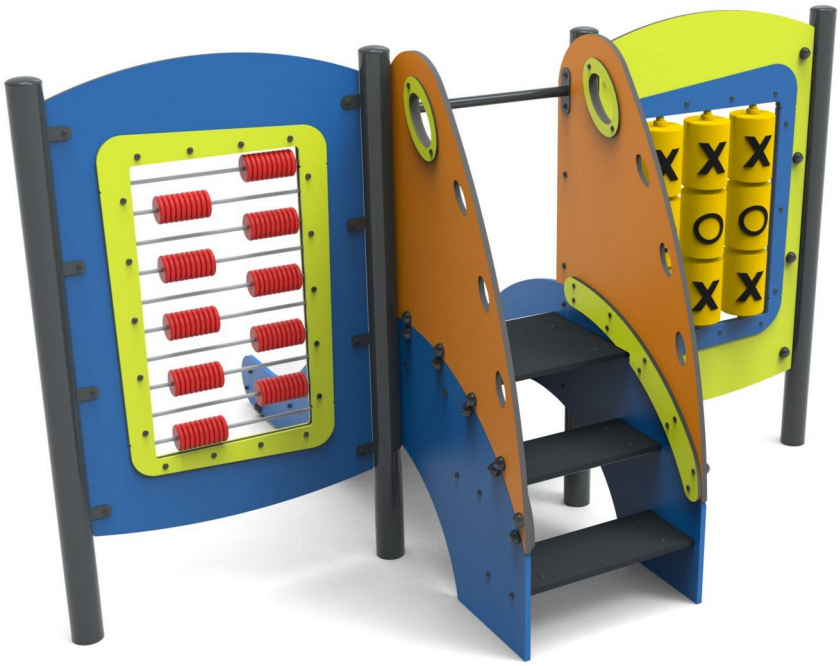

:

Due to continuous improvement of technical solutions by Freekids, the presented drawings, including colours and dimensions, may differ slightly from currently manufactured devices.

FreeKids s.c. A. Gąsiorek, Z.Andruszewski
Trzęsowice 32, 55-106 Zawonia

tel./fax: +48 71 312 72 50, +48 724 654 898
e-mail: biuro@freekids.pl www.freekids.pl

Elipso 8

0094038

METAL -

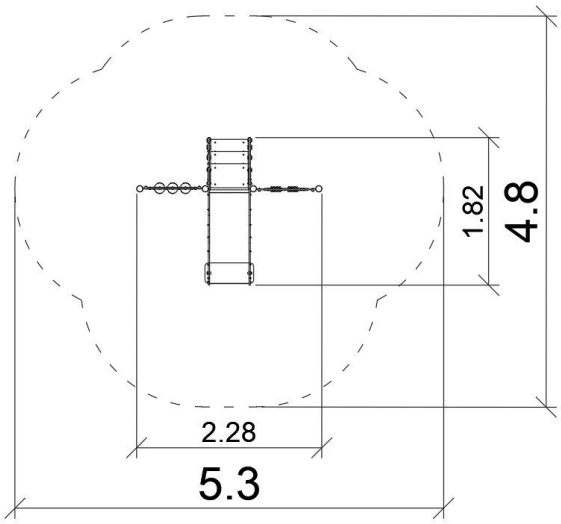

DEVICE DATA:

Device dimension	1.82 x 2.28 x 1.40 m
Zone dimension	4.80 x 5.30 m
Fall height	0,6 m
Safety zone area	19,0 m2
User age	2-5
Number of users	5
Material	Metal
Low fall height	yes
Compliance with standards	PN-EN 1176

Due to continuous improvement of technical solutions by Freekids, the presented drawings, including colours and dimensions, may differ slightly from currently manufactured devices.

FreeKids s.c. A. Gąsiorek, Z.Andruszewski
Trzęsowice 32, 55-106 Zawonia
tel./fax: +48 71 312 72 50, +48 724 654 898
e-mail: biuro@freekids.pl www.freekids.pl