# Huśtawka wagowa

# Flox

**0020030**

**METAL - UZUPEŁNIAJĄCE**

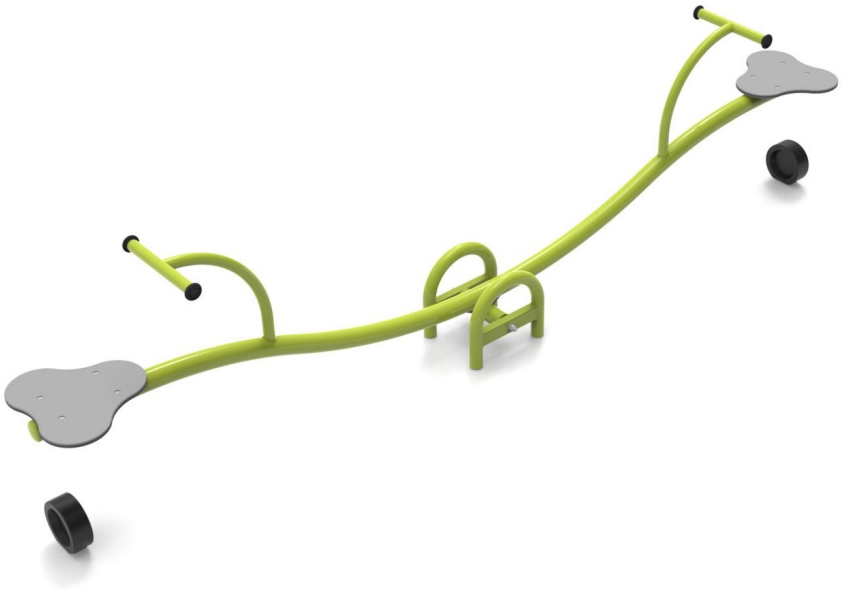

## Material specification:

| | |
|---|---|
| **Construction Material** | galvanized steel coated with powder paint for durability and corrosion resistance or made of stainless steel |
| **Additional Elements Handrails** | galvanized black steel, powder-coated or stainless steel |
| **Foundation** | buried in the ground to a specified depth and concreted with at least B-20 class concrete or bolted to a concrete base |
| **Boards** | HDPE sheets with milled drawings |

Due to continuous improvement of technical solutions by Freekids, the presented drawings, including colours and dimensions, may differ slightly from currently manufactured devices.

FreeKids s.c. A. Gąsiorek, Z.Andruszewski
Trzęsowice 32, 55-106 Zawonia
tel./fax: +48 71 312 72 50, +48 724 654 898
e-mail: biuro@freekids.pl www.freekids.pl

rev. 001/2026

# Huśtawka wagowa Flox

**0020030**

**METAL - UZUPEŁNIAJĄCE**

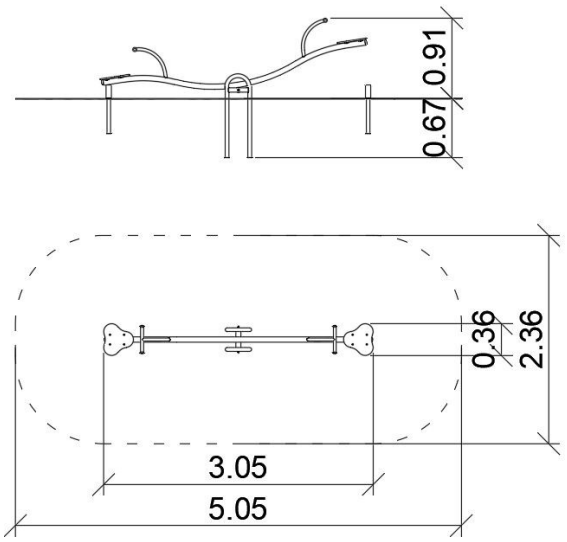


## DEVICE DATA:

| | |
|---|---|
| Device dimension | 3,05 x 0,36 x 0,91 m |
| Zone dimension | 5,05 x 2,36 m |
| Fall height | 0,70 m |
| Safety zone area | 11,00 m2 |
| User age | 3-12 |
| Number of users | 2 |
| Material | Metal |
| Low fall height | tak |
| Compliance with standards | PN-EN 1176 |

Due to continuous improvement of technical solutions by Freekids, the presented drawings, including colours and dimensions, may differ slightly from currently manufactured devices.

FreeKids s.c. A. Gąsiorek, Z.Andruszewski
Trzęsowice 32, 55-106 Zawonia
tel./fax: +48 71 312 72 50, +48 724 654 898
e-mail: biuro@freekids.pl www.freekids.pl

rev. 001/2026