Inclusive

Bloczki poziome integracyjne

0400010

METAL - UZUPEŁNIAJĄCE





Due to continuous improvement of technical solutions by Freekids, the presented drawings, including colours and dimensions, may differ slightly from currently manufactured devices.

FreeKids s.c. A. Gąsiorek, Z.Andruszewski
Trzęsowice 32, 55-106 Zawonia
tel./fax: +48 71 312 72 50, +48 724 654 898
e-mail: biuro@freekids.pl www.freekids.pl

rev. 001/2026

Bloczki poziome integracyjne

0400010

METAL - UZUPEŁNIAJĄCE

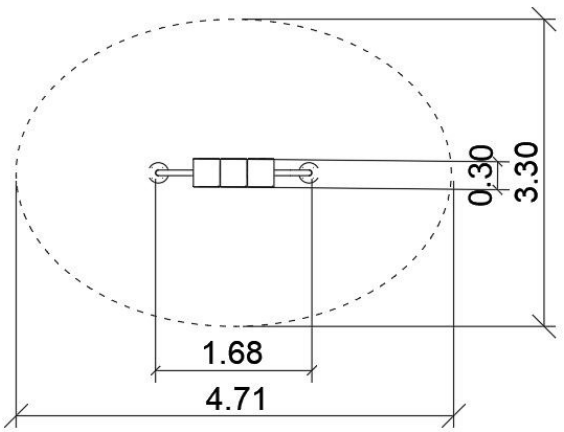

DEVICE DATA:

Device dimension	1,68 x 0,30 x 1,11 m
Zone dimension	3,30 x 4,71 m
Fall height	nie dotyczy m
Safety zone area	12,10 m2
User age	∞
Number of users	1
Material	Metal
Low fall height	nie dotyczy
Compliance with standards	PN-EN 1176

Due to continuous improvement of technical solutions by Freekids, the presented drawings, including colours and dimensions, may differ slightly from currently manufactured devices.

FreeKids s.c. A. Gąsiorek, Z.Andruszewski
Trzęsowice 32, 55-106 Zawonia
tel./fax: +48 71 312 72 50, +48 724 654 898
e-mail: biuro@freekids.pl www.freekids.pl

rev. 001/2026