Marble Run Integration Board

0400013

METAL - EDUCATIONAL BOARDS

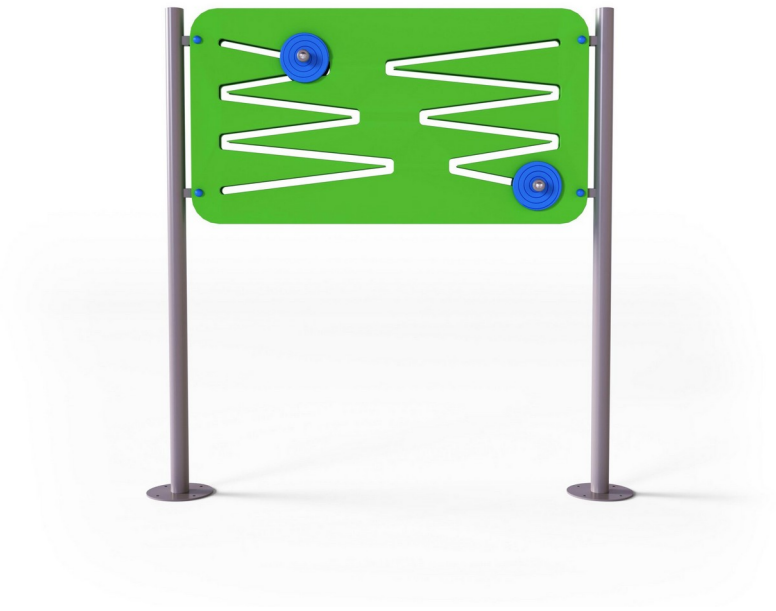

:

Due to continuous improvement of technical solutions by Freekids, the presented drawings, including colours and dimensions, may differ slightly from currently manufactured devices.

FreeKids s.c. A. Gąsiorek, Z.Andruszewski
Trzęsowice 32, 55-106 Zawonia
tel./fax: +48 71 312 72 50, +48 724 654 898
e-mail: biuro@freekids.pl www.freekids.pl

Marble Run Integration Board

0400013

METAL - EDUCATIONAL BOARDS

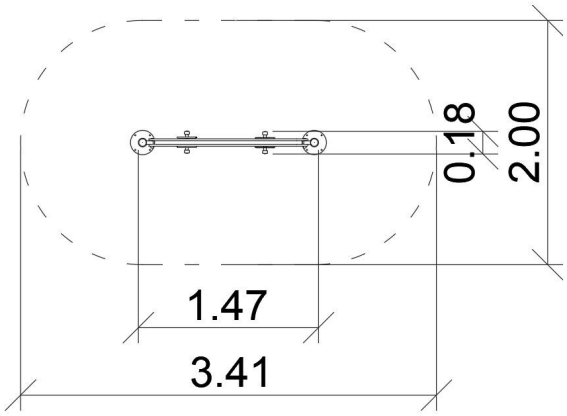

DEVICE DATA:

Device dimension	1.42 x 0.18 x 1.46 m
Zone dimension	3.41 x 2.00 m
Fall height	not applicable m
Safety zone area	14,06 m2
Number of users	2
Material	Metal
Low fall height	not applicable
Compliance with standards	PN-EN 1176

Due to continuous improvement of technical solutions by Freekids, the presented drawings, including colours and dimensions, may differ slightly from currently manufactured devices.

FreeKids s.c. A. Gąsiorek, Z.Andruszewski
Trzęsowice 32, 55-106 Zawonia
tel./fax: +48 71 312 72 50, +48 724 654 898
e-mail: biuro@freekids.pl www.freekids.pl