Piaskowy domek 1

0270011

DREWNO - ROBIN WOOD



Material specification:

Construction Material	Made of natural black locust wood, resistant to weather conditions, without sharp edges.
Additional Elements Handrails	stainless steel
Platforms	plywood or HPL Panels
Foundation	buried in the ground to a specified depth and concreted with at least B-20 class concrete or bolted to a concrete base
Other	Śruby wykonane ze stali nierdzewnej z poliamidowymi nakładkami. Kamienie wspinaczkowe z wytrzymałego tworzywa.

Due to continuous improvement of technical solutions by Freekids, the presented drawings, including colours and dimensions, may differ slightly from currently manufactured devices.

FreeKids s.c. A. Gąsiorek, Z.Andruszewski
Trzęsowice 32, 55-106 Zawonia
tel./fax: +48 71 312 72 50, +48 724 654 898
e-mail: biuro@freekids.pl www.freekids.pl

rev. 001/2026

Piaskowy domek 1

0270011

DREWNO - ROBIN WOOD

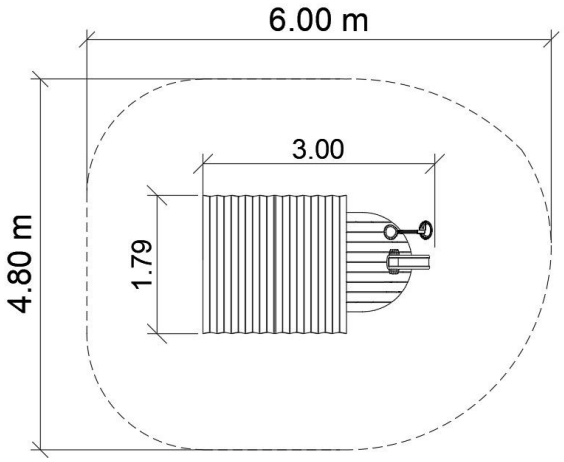

DEVICE DATA:

Device dimension	3,00 x 1,79 x 2,00 m
Zone dimension	4,8 x 6,0 m
Fall height	0,3 m m
Safety zone area	25,0 m2 m2
User age	3-12
Number of users	8
Material	Drewno
Low fall height	tak
Compliance with standards	PN-EN 1176

Due to continuous improvement of technical solutions by Freekids, the presented drawings, including colours and dimensions, may differ slightly from currently manufactured devices.

FreeKids s.c. A. Gąsiorek, Z.Andruszewski
Trzęsowice 32, 55-106 Zawonia
tel./fax: +48 71 312 72 50, +48 724 654 898
e-mail: biuro@freekids.pl www.freekids.pl

rev. 001/2026