Huśtawka wagowa stalowa Standard

0020028

METAL - UZUPEŁNIAJĄCE



Material specification:

Construction Material	galvanized steel coated with powder paint for durability and corrosion resistance
Additional Elements Handrails	galvanized black steel, powder-coated
Foundation	buried in the ground to a specified depth and concreted with at least B-20 class concrete or bolted to a concrete base
Boards	HDPE sheets with milled drawings
Other	Śruby wykonane ze stali nierdzewnej z poliamidowymi nakładkami. Bezpieczne i ergonomiczne siedziska.

Due to continuous improvement of technical solutions by Freekids, the presented drawings, including colours and dimensions, may differ slightly from currently manufactured devices.

FreeKids s.c. A. Gąsiorek, Z.Andruszewski
Trzęsowice 32, 55-106 Zawonia
tel./fax: +48 71 312 72 50, +48 724 654 898
e-mail: biuro@freekids.pl www.freekids.pl

rev. 001/2026

Huśtawka wagowa stalowa Standard

0020028

METAL - UZUPEŁNIAJĄCE

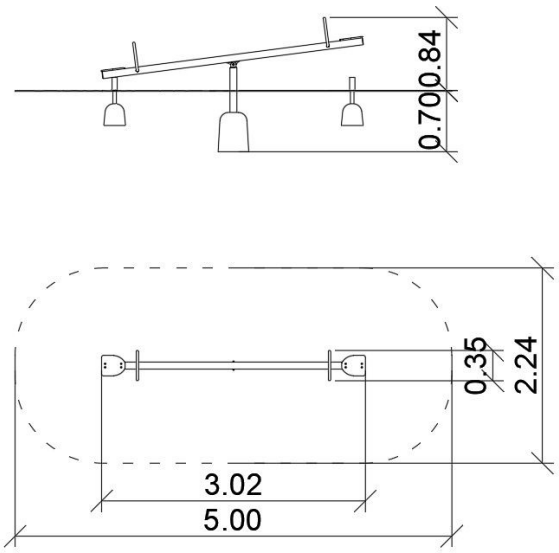

DEVICE DATA:

Device dimension	3,02 x 0,35 x 0,84 m
Zone dimension	5,00 x 2,24 m
Fall height	0,62 m
Safety zone area	10,30 m2
User age	3-12
Number of users	2
Material	Metal
Low fall height	tak
Compliance with standards	PN-EN 1176

Due to continuous improvement of technical solutions by Freekids, the presented drawings, including colours and dimensions, may differ slightly from currently manufactured devices.

FreeKids s.c. A. Gąsiorek, Z.Andruszewski
Trzęsowice 32, 55-106 Zawonia
tel./fax: +48 71 312 72 50, +48 724 654 898
e-mail: biuro@freekids.pl www.freekids.pl

rev. 001/2026