Fitness Mini - Tai-Chi Spinner

Fitness mini Series

OFK-03

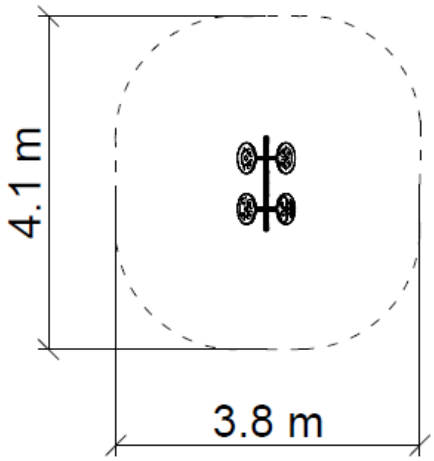

DESCRIPTION

Function:
The device stimulates wrists, elbows and shoulders to improve their flexibility. Improves muscles and shoulder joints.

How to exercise:
Small circles – stand with your face to the device. Grab the handles. With both your hands, rotate the circles in any direction. Large circles – stand with your face to the device. Grab the handle with one hand. Rotate to the right or to the left. Change hands and repeat the excercise.

Technical data

Dimensions (W x L x H)	1,16 x 0,70 x 1,37 m
Safety area dimensions	3,8 x 4,1 m
Safety area	15,4 m^2

Available options:

STEEL	galvanized and powder-coated steel elements.
STEPS	Steps made of corrugated aluminum.
SEATS	HDPE sheets
FASTENERS	galvanized and powder-coated steel elements
ADDITIONAL ELEMENTS	cap nuts, stainless steel, black plastic caps
FOUNDATIONS	The device is permanently set up in the ground, anchored in concrete of class min. C16 / 20

* Due to the continuous improvement of technical solutions by FreeKids, presented drawings, including colors and dimensions may slightly differ from currently manufactured devices. Certificate of compliance with the PN-EN 1176: 2017

freekids PRODUCENT PLACÓW ZABAW

FreeKids s.c. A. Gąsiorek, Z.Andruszewski
Trzęsowice 32, 55-106 Zawonia

tel./fax: +48 71 312 72 50, +48 724 654 898
e-mail: biuro@freekids.pl www.freekids.pl